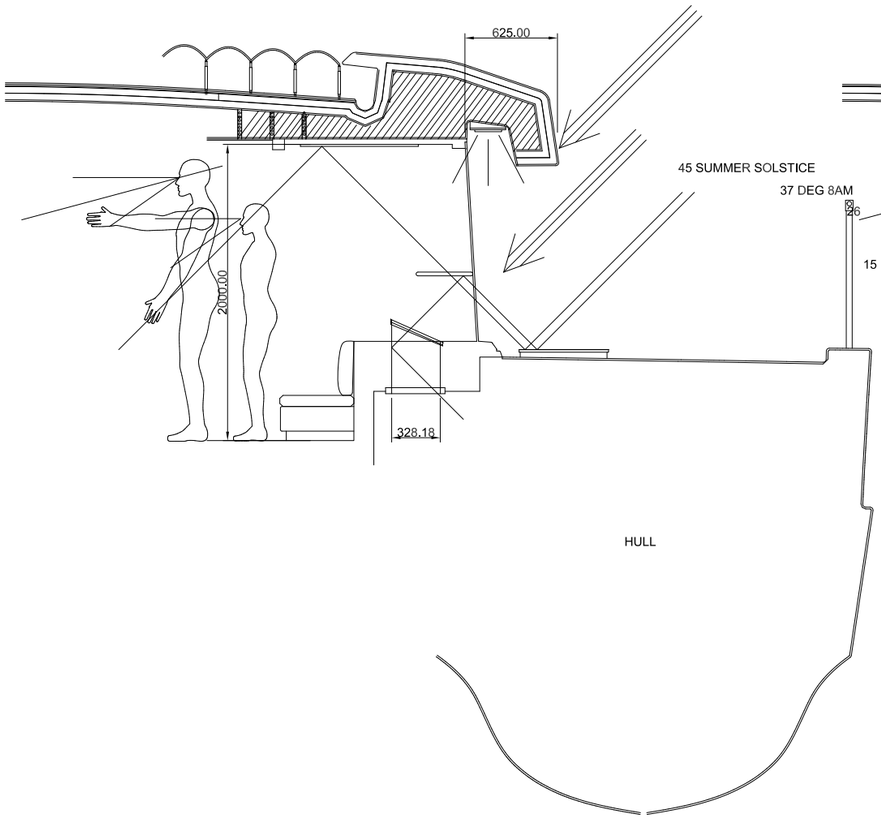
625.00
45 SUMMER SOLSTICE
37 DEG 8AM
26
15 DEG 6AM
2000.00
328.18
HULL

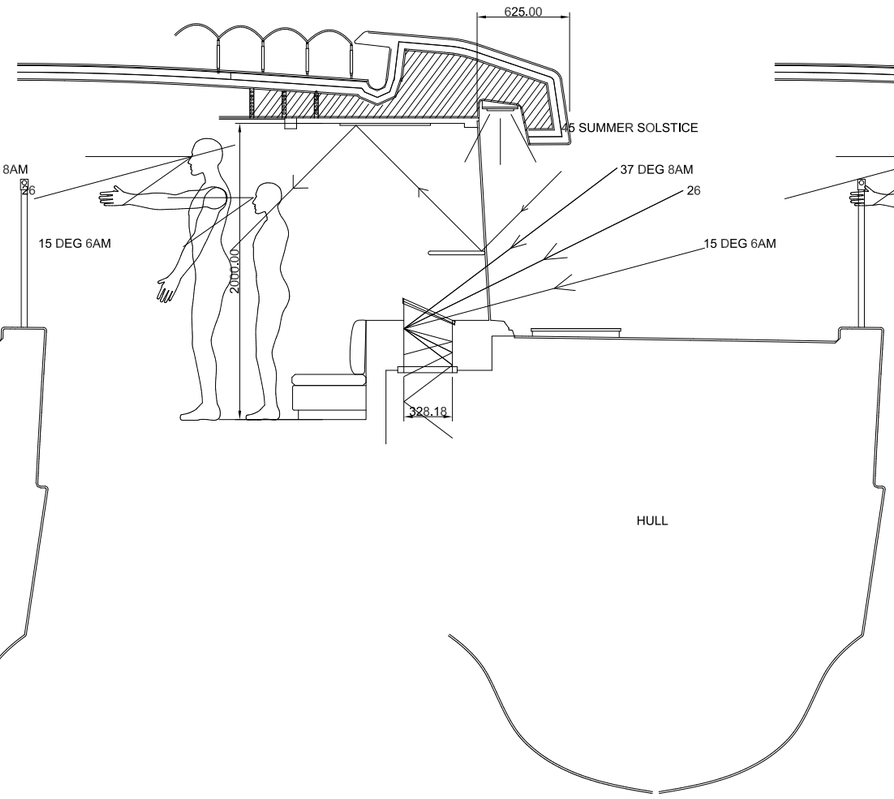
625.00
45 SUMMER SOLSTICE
37 DEG 8AM
26
15 DEG 6AM
2000.00
328.18
HULL

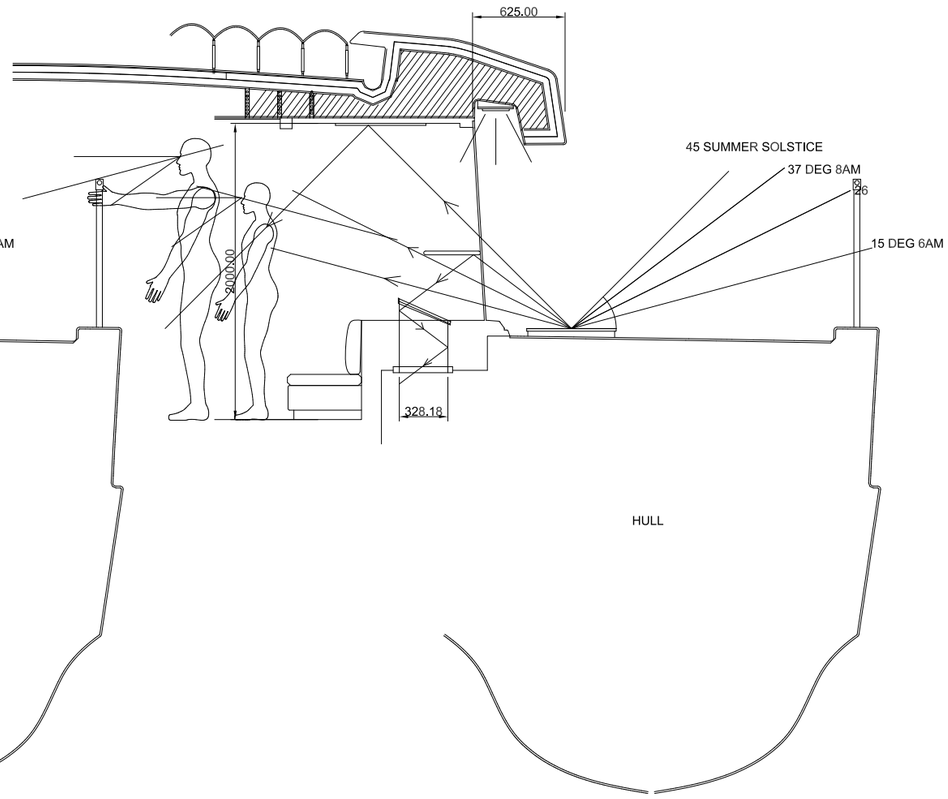
625.00
45 SUMMER SOLSTICE
37 DEG 8AM
26
15 DEG 6AM
2000.00
328.18
HULL