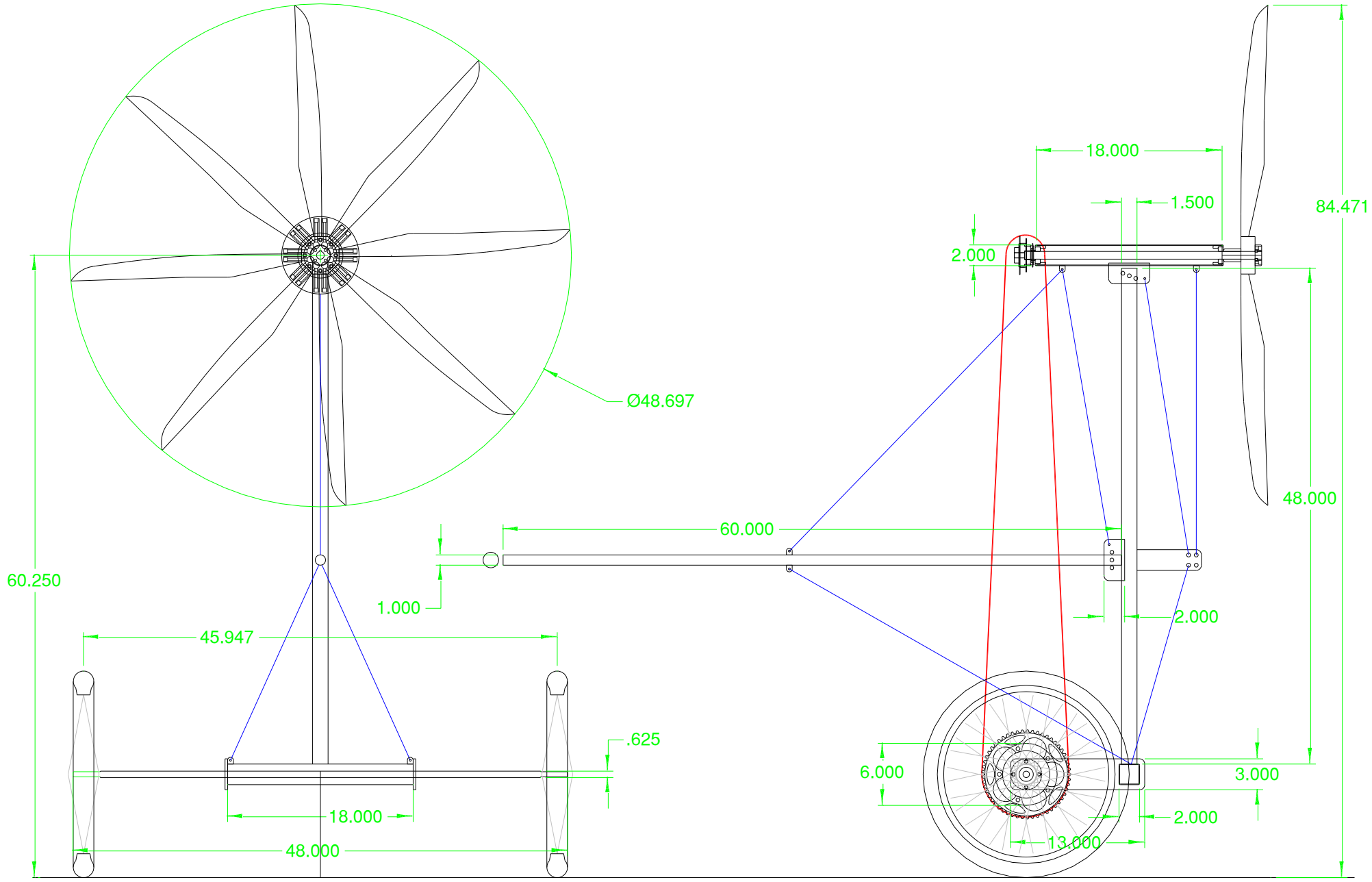

WindRacer Trailer